RoHS

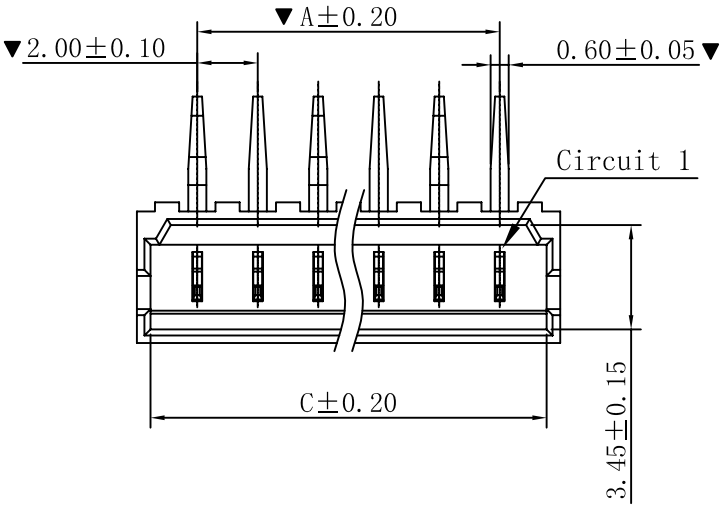

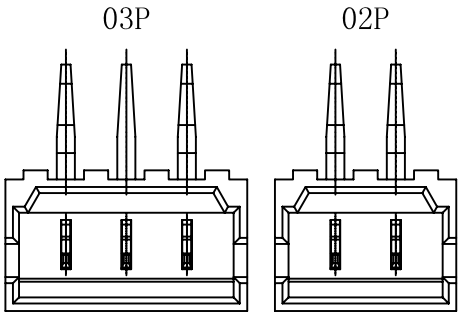

■ SPECIFICATIONS

- Voltage rating: 125V AC, DC
- Current rating: 2A, AC, DC
- Withstanding Voltage: 800V AC/minute
- Insulation resistance:1000MΩ min
- Temperature range: -25° C~+85° C
- Contact resistance: 10mΩ max

■ WAFER

- Part No.: W2002R-NP
- Poles : 02-15P
- Housing Material:Nylon 66 15%GF UL94V-0
- Pin Material: Brass
- Contact Area Plating: Tin-Plated
- The Dimension Marked "▼" Must Be Recorded

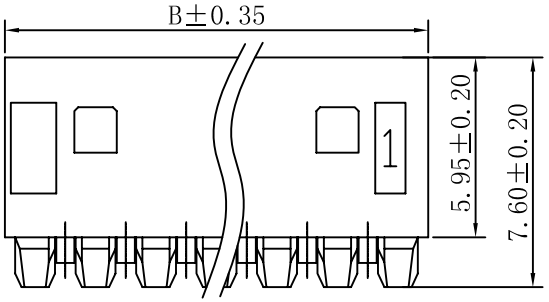

04P-15P

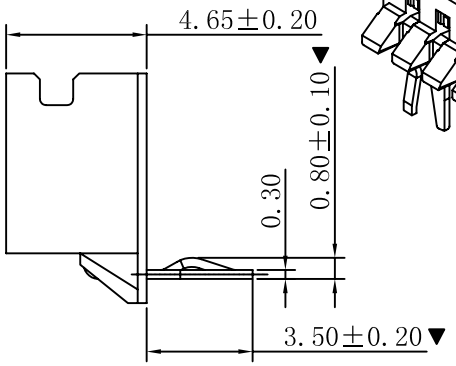

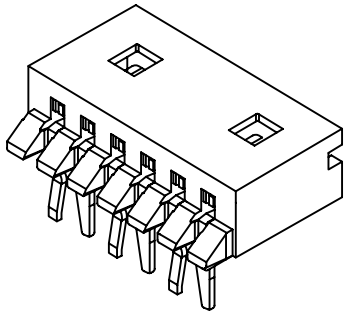

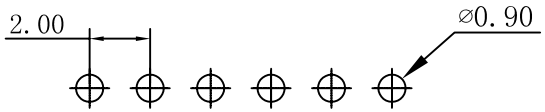

P.C.B LAYOUT

PART NO.	Dimensions (mm)		
	A	B	C
02	2.00	6.00	5.10
03	4.00	8.00	7.10
04	6.00	10.00	9.10
05	8.00	12.00	11.10
06	10.00	14.00	13.10
07	12.00	16.00	15.10
08	14.00	18.00	17.10
09	16.00	20.00	19.10
10	18.00	22.00	21.10
11	20.00	24.00	23.10
12	22.00	26.00	25.10
13	24.00	28.00	27.10
14	26.00	30.00	29.10
15	28.00	32.00	31.10

版次 REV.	说明 DESCRIPTION	日期 DATE.	承认 APPRO.
C	修订版本	2015-11-04	陈雄军
B	变更图宽格式内容	2013-12-27	陈雄军
A	新版本	2011-05-24	陈雄军

一般公差 GENERAL TOLERANCE:	0±0.30 .0±0.25 .00±0.20 .000±0.05 ANGLE. ±1°
绘图/DR	陈雄军
审核/CHECK	胡进
核准/APPRO	MR.feng
日期/DATE	2015-11-04

XYDZ® 东莞市祥运连接器有限公司
Connectors DongGuan XiangYun Connectors CO.,Ltd

投影法 Projection		品 名 (PART NEME)	MX2.00mm 90° Wafer Connector Series
单位 Unit	MM		
比例/Scale	1:1		
大小/SIZE	A4	料 号 (PART NO)	W2002R-NP
页码/SHEET	1/1		
版本/Rev	C		

RoHS

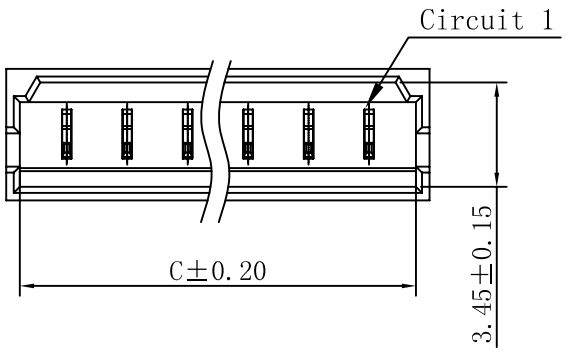

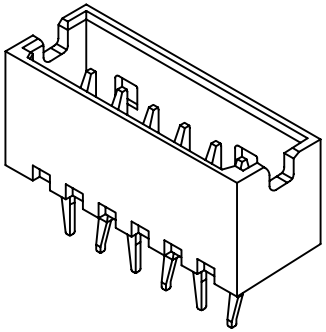

■SPECIFICATIONS

- Voltage rating: 125V AC, DC
- Current rating: 2A, AC, DC
- Withstanding Voltage: 800V AC/minute
- Insulation resistance:1000MΩ min
- Temperature range: -25° C~+85° C
- Contact resistance: 10mΩ max

■WAFER

- Part No.: W2002V-NP
- Poles : 02-15P
- Housing Material:Nylon 66 15%GF UL94V-0
- Pin Material: Brass
- Contact Area Plating: Tin-Plated
- The Dimension Marked "▼" Must Be Recorded

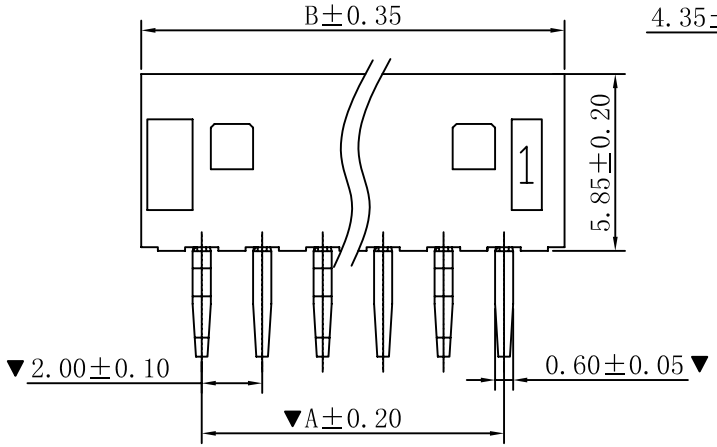

04P-15P

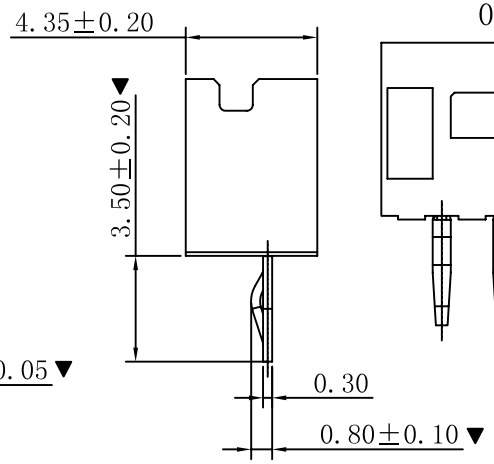

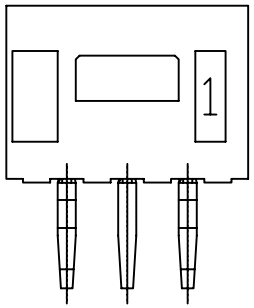

03P

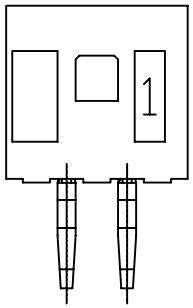

02P

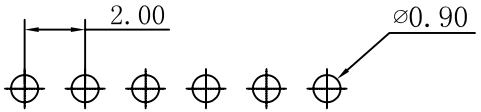

P.C.B LAYOUT

PART NO.	Dimensions (mm)		
	A	B	C
02	2.00	6.00	5.10
03	4.00	8.00	7.10
04	6.00	10.00	9.10
05	8.00	12.00	11.10
06	10.00	14.00	13.10
07	12.00	16.00	15.10
08	14.00	18.00	17.10
09	16.00	20.00	19.10
10	18.00	22.00	21.10
11	20.00	24.00	23.10
12	22.00	26.00	25.10
13	24.00	28.00	27.10
14	26.00	30.00	29.10
15	28.00	32.00	31.10

版次 REV.	说明 DESCRIPTION	日期 DATE.	承认 APPRO.
C	修订版本	2015-11-04	陈雄军
B	变更图宽格式内容	2013-12-27	陈雄军
A	新版本	2011-05-24	陈雄军

一般公差 GENERAL TOLERANCE:	0±0.30 .0±0.25 .00±0.20 .000±0.05 ANGLE. ±1°
绘图/DR	陈雄军
审核/CHECK	胡进
核准/APPRO	MR.feng
日期/DATE	2015-11-04

XYDZ® 东莞市祥运连接器有限公司
Connectors DongGuan XiangYun Connectors CO.,Ltd

投影法 Projection	
单位 Unit	MM
比例/Scale	1:1
大小/SIZE	A4
页码/SHEET	1/1
版本/Rev	C

品 名 (PART NEME)	MX2.00mm 180° Wafer Connector Series
料 号 (PART NO)	W2002V-NP